TBI MOTION

Ball Screw

TuLi

www.tuli.si

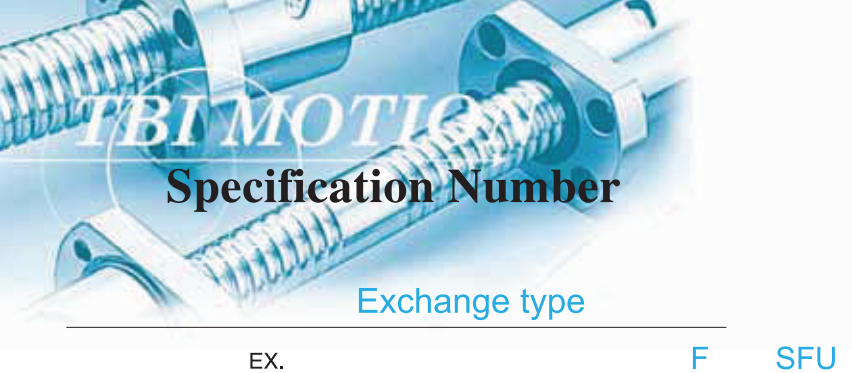

Specification Number

Exchange type

EX. F SFU R 025 05 T4 D

(1) Produce code
F : Rolled

S
- S : Single nut
- D : Double nut

F
- F : With flange
- C : Without flange

S
- S : DIN nut
- U : DIN nut
- I : I type nut
- E : E type nut
- K : K type nut
- V : V type nut
- T : T type nut
- M : M type nut
- Y : Y type nut
- H : H type nut

(2) Nut type codes

(3) Direction of helix
R : Right L : Left

(4) Shaft dia. (mm)

(5) Lead (mm)

(6) No. of Turn (Circuits) or Turn x Row
Turn : T:1 A:1.5(or 1.7/1.8) B:2.5/2.8 C:3.8 D : 4.8 ex : (2.5x2 = B2)

(7) Flange type
N : Not cutting S : Single cutting D : Double cutting

EX. SC R 025 05 F C7 - 1000

(1) Type
SC : Standard SS : For SFS & DFS Only

(2) Direction of helix
R : Right L : Left

(3) Shaft dia. (mm)

(4) Lead (mm)

(5) Produce code
G : Ground F : Rolled

(6) Accuracy grade code
C0、C1、C2、C3、C5、C7、C10

(7) Overall length of shaft(mm)

Code \ Produce	G-R	F-R	G-L	F-L
☆	✓	✓	✓	✓
○	✓	✓	✓	
△	✓	✓		
◎	✓		✓	
■	✓			
◇		✓		

Produce code :
G : Ground F : Rolled

Direction of helix :
R-Right L-Left

TuLi
www.tuli.si

Dimension Table of *TBI MOTION* Ball Screws

(TYPE) : SFU(DIN 69051 FORM B)

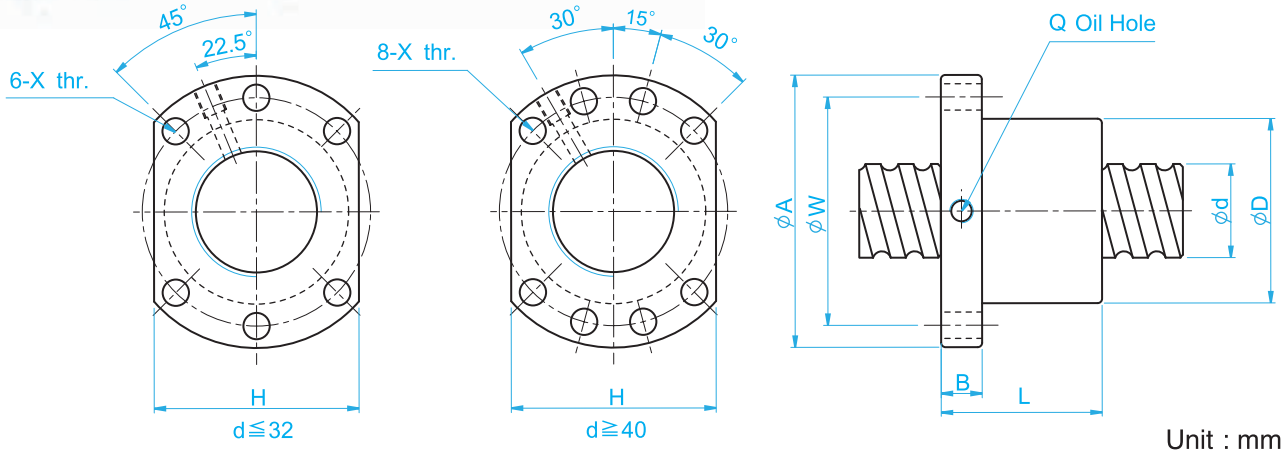

Unit : mm

l: Lead Da: Ball Dia. n: Number of Circuits K: Stiffness (Kgf/μm)
Ca: Basic Dynamic Rating Load (Kgf) Coa: Basic Static Rating Load(Kgf)

	Model No.	Dimensions														
		d	l	Da	D	A	B	L	W	X	H	Q	n	Ca	Coa	K
△	SFU01204-4	12	4	2.5	24	40	10	40	32	4.5	30		1x4	902	1884	26
☆	SFU01604-4	16	4	2.381	28	48	10	40	38	5.5	40	M6	1x4	973	2406	32
☆	SFU01605-4		5	3.175	28	48	10	50	38	5.5	40	M6	1x4	1380	3052	32
☆	SFU01610-3		10	3.175	28	48	10	57	38	5.5	40	M6	1x3	1103	2401	26
△	SFU02004-4	20	4	2.381	36	58	10	42	47	6.6	44	M6	1x4	1066	2987	38
☆	SFU02005-4		5	3.175	36	58	10	51	47	6.6	44	M6	1x4	1551	3875	39
△	SFU02504-4	25	4	2.381	40	62	10	42	51	6.6	48	M6	1x4	1180	3795	43
☆	SFU02505-4		5	3.175	40	62	10	51	51	6.6	48	M6	1x4	1724	4904	45
■	SFU02506-4		6	3.969	40	62	10	54	51	6.6	48	M6	1x4	2318	6057	47
■	SFU02508-4		8	4.762	40	62	10	63	51	6.6	48	M6	1x4	2963	7313	49
○	SFU02510-4		10	4.762	40	62	12	85	51	6.6	48	M6	1x4	2954	7295	50
△	SFU03204-4	32	4	2.381	50	80	12	44	65	9	62	M6	1x4	1296	4838	51
☆	SFU03205-4		5	3.175	50	80	12	52	65	9	62	M6	1x4	1922	6343	54
■	SFU03206-4		6	3.969	50	80	12	57	65	9	62	M6	1x4	2632	7979	57
■	SFU03208-4		8	4.762	50	80	12	65	65	9	62	M6	1x4	3387	9622	60
☆	SFU03210-4		10	6.35	50	80	12	90	65	9	62	M6	1x4	4805	12208	61
☆	SFU04005-4	40	5	3.175	63	93	14	55	78	9	70	M8	1x4	2110	7988	63
■	SFU04006-4		6	3.969	63	93	14	60	78	9	70	M6	1x4	2873	9913	66
■	SFU04008-4		8	4.762	63	93	14	67	78	9	70	M6	1x4	3712	11947	70
☆	SFU04010-4		10	6.35	63	93	14	93	78	9	70	M8	1x4	5399	15500	73
☆	SFU05010-4	50	10	6.35	75	110	16	93	93	11	85	M8	1x4	6004	19614	85
△	SFU05020-4		20	7.144	75	110	16	138	93	11	85	M8	1x4	7142	22588	94
○	SFU06310-4	63	10	6.35	90	125	18	98	108	11	95	M8	1x4	6719	25358	99
△	SFU06320-4		20	9.525	95	135	20	149	115	13.5	100	M8	1x4	11444	36653	112
△	SFU08010-4	80	10	6.35	105	145	20	98	125	13.5	110	M8	1x4	7346	31953	109
△	SFU08020-4		20	9.525	125	165	25	154	145	13.5	130	M8	1x4	12911	47747	138
■	SFU10020-4	100	20	9.525	150	202	30	180	170	17.5	155	M8	1x4	14303	60698	162

www.tuli.si

Dimension Table of *TBI MOTION* Ball Screws

(TYPE) : SFE

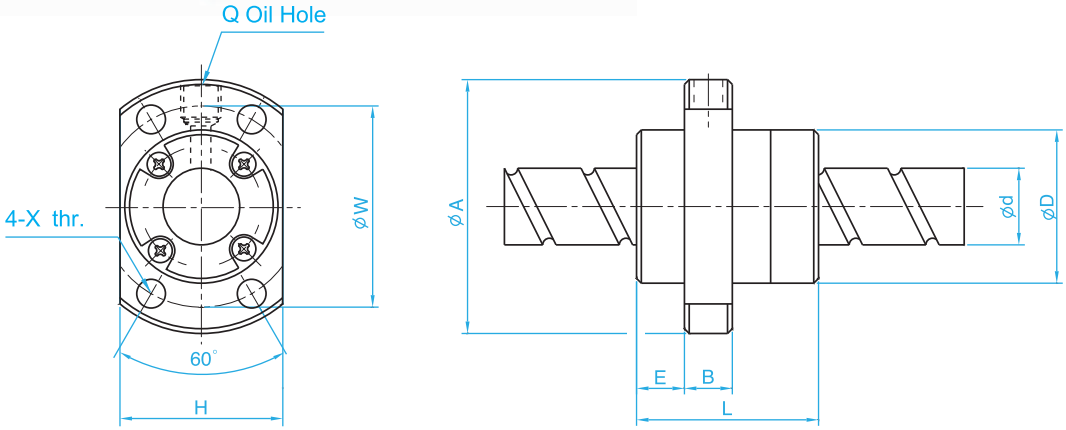

Unit : mm

l: Lead Da: Ball Dia. n: Number of Circuits K: Stiffness (Kgf/μm)
Ca: Basic Dynamic Rating Load (Kgf) Coa: Basic Static Rating Load(Kgf)

	Model No.	Dimensions															
		d	l	Da	D	A	E	B	L	X	W	H	Q	n	Ca	Coa	K
△	SFE01616-3	16	16	2.778	32	53	10.1	10	38	4.5	42	34	M6	1.7x2	1021	2409	29
△	SFE01632-3	16	32	2.778	34	55	10.5	10	34	5.5	45	36	M6	0.7x2	439	976	11
△	SFE02020-3	20	20	3.175	39	62	12	10	47	5.5	50	41	M6	1.7x2	1321	3320	35
△	SFE02040-3	20	40	3.175	38	58	11	10	41	5.5	48	40	M6	0.7x2	582	1397	13
△	SFE02525-3	25	25	3.969	47	74	14	12	57	6.6	60	49	M6	1.7x2	1974	5188	43
△	SFE02550-3	25	50	3.969	46	70	13	12	50	6.6	58	48	M6	0.7x2	870	2183	16
△	SFE03232-3	32	32	4.762	58	92	17	12	71	9	74	60	M6	1.7x2	2876	8207	54
△	SFE03264-3	32	64	4.762	58	92	15.5	12	62	9	74	60	M6	0.7x2	1225	3282	20
△	SFE04040-3	40	40	6.35	73	114	19.5	15	89	11	93	75	M6	1.7x2	4600	13281	66
△	SFE05050-3	50	50	7.938	90	135	21.5	20	107	14	112	92	M6	1.7x2	6512	19430	80

※ *TBI MOTION* Standard nuts are without seals, if required, please advise. ※
Recommended to use the new SFY type.

www.tuli.si

Dimension Table of *TBI MOTION* Ball Screws

(TYPE) : BSH

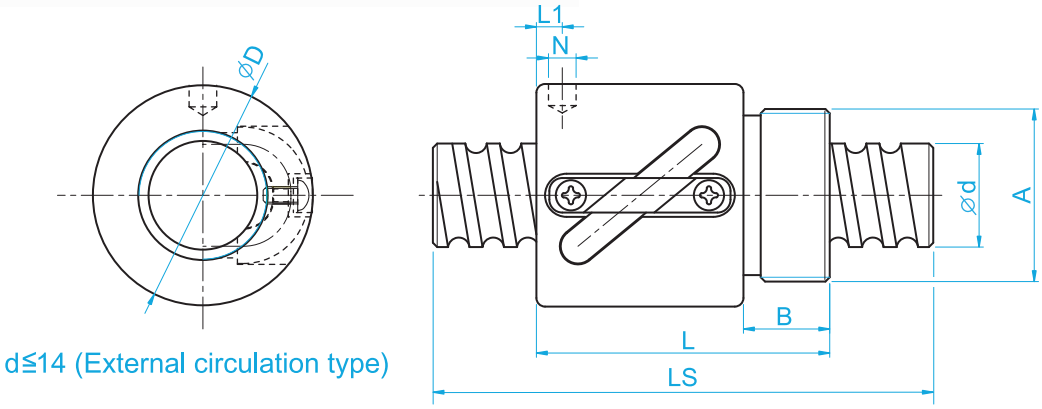

d≦14 (External circulation type)

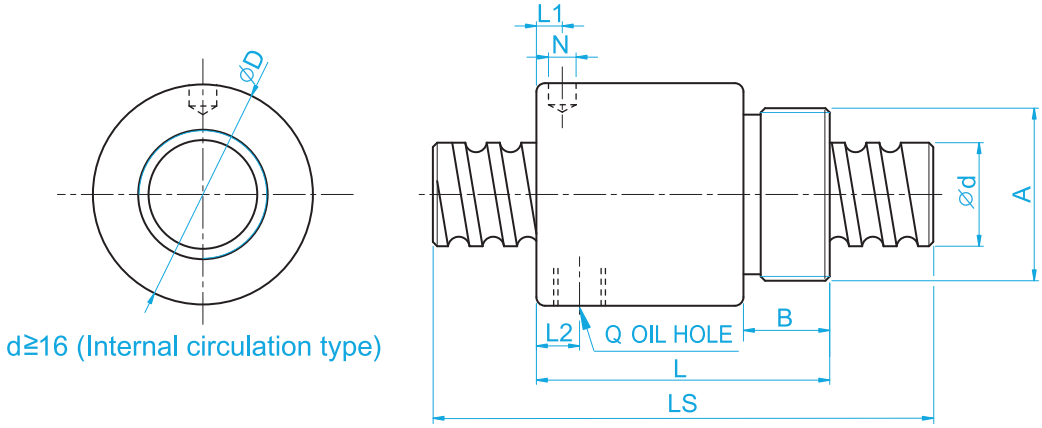

d≧16 (Internal circulation type)

Unit : mm

d:Screw O.D. l: Lead Da: Ball Dia. n: Number of Circuits Ls: Screw Length
Ca: Basic Dynamic Rating Load (Kgf) Coa: Basic Static Rating Load(Kgf)

	Model No.	Dimensions														
		d	l	Da	D	A	B	L	L1	N	L2	Q	n	Ca	Coa	K
△	BSHR0082.5-2.5	8	2.5	1.2	17.5	M15x1P	7.5	23.5	10	3	-	-	2.5x1	189	381	11
△	BSHR01002-3.5	10	2	1.2	19.5	M17x1P	7.5	22	3	3.2	-	-	3.5x1	277	664	17
△	BSHR01004-2.5		4	2	25	M20x1P	10	34	3	3	-	-	2.5x1	400	754	14
△	BSHR01204-3.5	12	4	2.5	25.5	M20x1P	10	34	13	3	-	-	3.5x1	804	1649	23
△	BSHR01205-3.5		5	2.5	25.5	M20x1P	10	39	16.25	3	-	-	3.5x1	801	1644	24
■	BSHR01404-3.5	14	4	2.381	32.1	M25x1.5P	10	35	13	3	-	-	3.5x1	804	1803	26
△	BSHR01604-3	16	4	2.381	29	M22x1.5P	8	32	4	3.2	-	-	1x3	759	1804	24
△	BSHR01605-3		5	3.175	32.5	M26x1.5P	12	42	19.25	3	-	-	1x3	1077	2289	25
△	BSHR02005-3	20	5	3.175	38	M35x1.5P	15	45	20.3	3	-	-	1x3	1211	2906	30
△	BSHR02505-4	25	5	3.175	43	M40x1.5P	19	69	32.11	3	8	M6	1x4	1724	4904	37

Note : Nuts do not attach seals from ∅ 8 to ∅16.

www.tuli.si